http://www.cergy-vis.fr
[CERGY-VIS]
ET SI ON PARLAIT SERVICE

Vor Auslegung einer automatisierten Verarbeitung des Teils sollte Rueckspracche mit Fa. A.Raymond gehalten werden.
Fully automatic processing of the part requires prior consultation with A.Raymond GmbH.

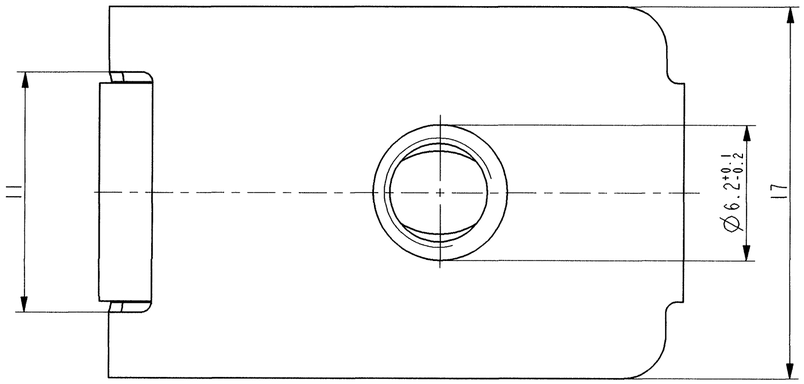

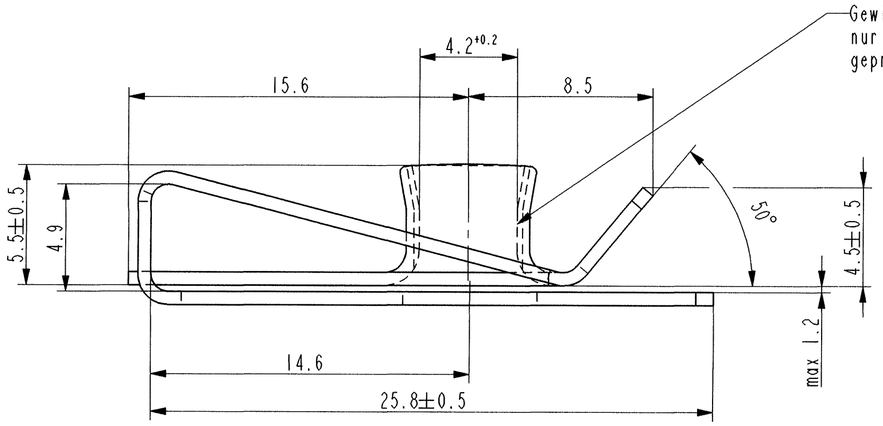

Gewindedurchzug kann auf 2 Gaenge nur mit lehrenhaltiger M5 Schraube geprueft werden.

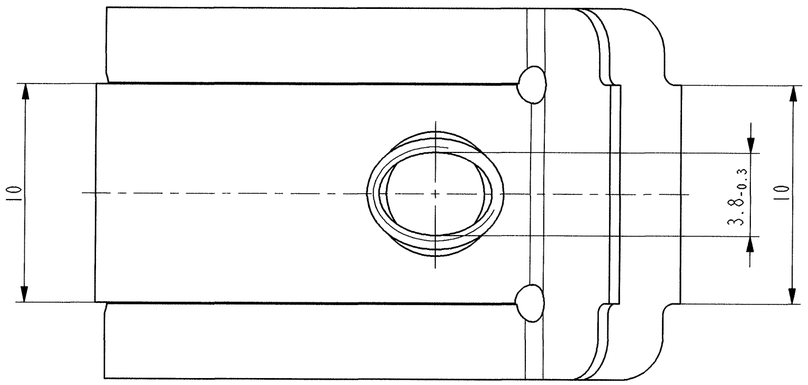

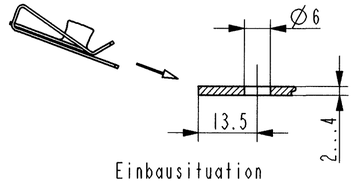

Einbausituation
1:1

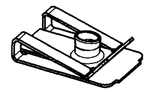

3D-Ansicht
1:1

Oberfl.Spez.:
VW TL217 / c342

Ind.	kumul vor/ bor offen	Beschreibung / Description	Datum/Date	Name
-	-	-	-	-
-	-	-	-	-
-	-	-	-	-
-	-	-	-	-
-	-	-	-	-
-	-	-	-	-
-	-	-	-	-
-	-	-	-	-
-	-	-	-	-
-	-	-	-	-
-	-	-	-	-
-	-	-	-	-
Aa	-	Erstfreigabe	06.04.06	mj

Aenderungen / Modifications

Format DIN A2

A.Raymond GmbH & Co. KG
SPEZIALBEFESTIGUNGSSYSTEME WELTWEIT / ENGINEERED FASTENERS WORLDWIDE

Bei Verstaenndnisproblemen beantragen Sie bitte beim Absender die deutsche Fassung vor jeder Anwendung.
"CONDITIONS OF USE"
This drawing and all information (the "Drawing") disclosed are the exclusive property of A.Raymond. By using this Drawing the Addressee acknowledge and accept that this Drawing (1) is covered by A.Raymond' intellectual property rights or know-how and (2) is provided under the following conditions who represent a Deposit Agreement. This Drawing is for Adressee' internal use only limited to its estimation. Without prior written consent of A.Raymond, no permission or rights for any purpose, is hereby granted, such as, without any limitation, (1) the copy, in part or entirely (2) and/or the presentation, in part or entirely, to any other third party outside the Addressee' company or in the company but with no interest (3) and/or the distribution of the Drawing, in part or entirely, in any medium (4) and/or the creation of any derivative work. In case of breach of these conditions, Addressee shall indemnify A.Raymond from and against all damages (compensatory or consequential), costs, expenses and charges, caused or arising out of or attributable to its willful misconduct, fraud, negligence, infringement of A.Raymond' intellectual property rights. If the Addressee does not accept these conditions, please notify A.Raymond' sender immediately.

Dateiname/ Filename: CAD-PE: 206923_C_01 — VW

Ersatz fuer/ Substitute for: - -

Proj.-Nr./ Proj.-No.: 54718 — RASCH-Code: AAACB

Vol.(mm³): - — Gewicht/ Weight (g): -

Schutzrechte/ Patent rights: vorbehalten / all rights reserved

Gepr./ App. — F.-gepr./ Produktion — Q.-gepr./ Quality — S.-gepr./ Patent app.

Maszstab/ Scale: 5:1

Allgem.Tol. wenn nicht anders angegeben/ General tol. unless otherwise specified: ±0.3 / ±5°

Datum/ Date: 06.04.2006

Gez./ Drawn: M. Junge

Oberflaechenbehandlg./ Finish: verzinkt / passiviert farblos - — Kennzahl/ Code number: 3250

Werkstoffbehandlg./ Material treatment: zwischenstufenverguetet 365 ... 465 HV 5 — Blechdicke/ Mat.Thickn. DIN EN 10 140: 0.6

Werkstoff/ Material: C 45 E DIN EN 10 132-3 - — Mat.-Code: 1040

Benennung/ Partname: Blechmutter fuer Bentley 615 fuer Gewinde M5, selbstsichernd

Teil-Nr./ Part-No.: 206923 001 — C

Teil-Nr. / Part-No.	Oberflaeche / Farbe / Finish / colour	Kennzahl/ Code
.	.	.

Ausfuehrung / Execution