http://www.cergy-vis.fr
[CERGY-VIS]
ET SI ON PARLAIT SERVICE

Schwergaengigkeit des Gewindes durch Oberflaechenbeschichtung zulaessig /
slow thread engagement caused by the surface finish permissible

Gewindedurchzug kann nur auf 2 Gaenge mit lehrenhaltiger M6 Schraube geprueft werden /
the thread strength can only be tested on 2 turns with a calibrated M6 screw gauge

Vor Auslegung einer automatisierten Verarbeitung des Teils sollte Rueckspracche mit Fa. ARaymond gehalten werden.
Fully automatic processing of the part requires prior consultation with ARaymond.

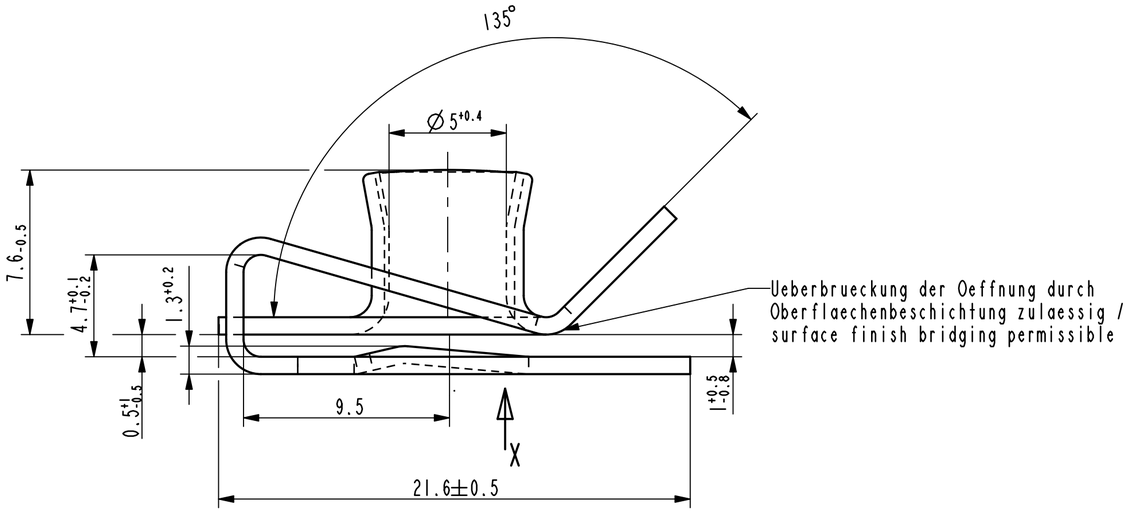

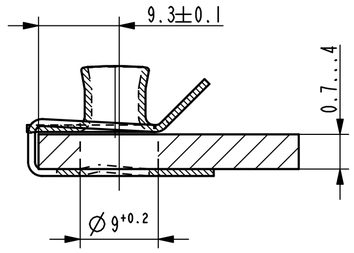

Einbausituation /
assembly situation
2:1

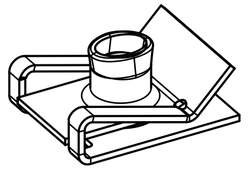

Isometrische Ansicht /
isometric view
2:1

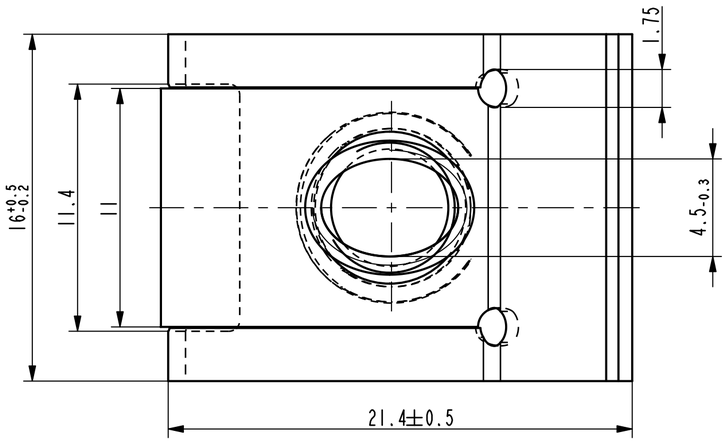

Ansicht X

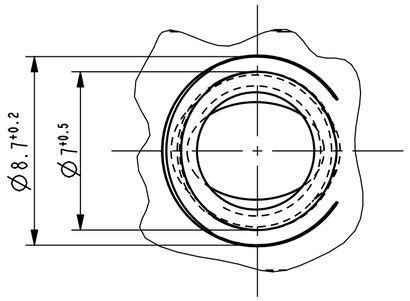

Rev.	Anzahl/ quantity	Aenderungsbeschreibung / modification description	Datum/date	Name
-	-	-	-	-
-	-	-	-	-
-	-	-	-	-
-	-	-	-	-
-	-	-	-	-
-	-	-	-	-
-	-	-	-	-
-	-	-	-	-
Ab	1x	Zeichnung ueberarbeitet nach AR-Gruppenstandard, Teil unveraendert	28.02.12	toH
-	-	Oberflaechenvariante -03 (4004) hinzugefuegt	-	-

ARaymond
A RAYMOND GmbH & Co.KG
Teichstrasse 57
Germany - 79511 Loerrach
Phone +49 (0) 7621 174-0
Fax +49 (0) 7621 174-225

Bei Verstaendnisproblemen beantragen Sie bitte beim Absender die deutsche Fassung vor jeder Anwendung.
"CONDITIONS OF USE"
This drawing and all information (the "Drawing") disclosed are the exclusive property of ARaymond.
By using this Drawing the Addressee acknowledge and accept that this Drawing
(1) is covered by ARaymond' intellectual property rights or know-how and
(2) is provided under the following conditions who represent a Deposit Agreement.
This Drawing is for Adressee' internal use only limited to its estimation.
Without prior written consent of ARaymond, no permission or rights for any purpose, is hereby granted, such as, without any Limitation,
(1) the copy, in part or entirely
(2) and/or the presentation, in part or entirely, to any other third party outside the Addressee' company or in the company but with no interest
(3) and/or the distribution of the Drawing, in part or entirely, in any medium
(4) and/or the creation of any derivative work.
In case of breach of these conditions, Addressee shall indemnify ARaymond from and against all damages (compensatory or consequential), costs, expenses and charges, caused or arising out of or attributable to its willful misconduct, fraud, negligence, infringement of ARaymond' intellectual property rights. If the Addressee does not accept these conditions, please notify ARaymond' sender immediately.

Intellectual property rights	vorbehalten / all rights reserved		Classification code: AABCC
Ersatz fuer/ substitue for	020037_C_01/Aa/14.01.08	Entw.Ref./ dev.ref.	Projekt-Nr./ project no.: 30290
Maszstab/ scale: 5:1	Format: A2	Allgemeintoleranz/ general tolerance: ±0.3 / ±5°	Datum/ date: 28.02.2012
			Erstellt von/ prepared by: T.Hess
Projektion / projection	ALL DIMENSIONS ARE IN MILLIMETERS		Freigegeben/ approved: 20120228073833
	Blechdicke/ mat. thickness DIN EN 10140: 0.80	Volumen/ volume (mm3): 589.9	Gewicht/ weight (g): 4.7

Oberfl./ finish: metallhaltige Korrosionsschutzbeschichtung, Farbe silber
metallic corrosion protection coated, colour silver
Oberfl. Code/ finish code: 5410

Werkstoffbehandl./ material treatment: zwischenstufenverguetet / austempered
365 ... 465 HV 5

Werkstoff/ material: C45E DIN EN 10132-3
Mat. code: 1040

Benennung/ title:

Blechmutter

fuer Gewinde M6, selbstsichernd

sheet metal nut

for thread M6, selflocked

Teil-Nr./ part no.: 020037-0-01
Drawing type: C:Customer

Kundenteile-Nr. / customer part no.: -
Blatt / sheet: 1 / 1

CAD system & version: ProE WF4
Dateiname / filename: 020037-0C00

	Teil-Nr. / part no.	Oberflaeche / Farbe / finish / colour	Oberfl. Code/ finish code
Ab	020037-0-03	metallhaltige Korrosionsschutzbeschichtung, Farbe silber, GZ metallic corrosion protection coated, colour silver, lubricated	4004
	020037-0-02	metallhaltige Korrosionsschutzbeschichtung, Farbe silber, GZ metallic corrosion protection coated, colour silver, lubricated	4000

Ausfuehrung / Execution